Bimetallic Steam Trap PN40, ANSI150/300

Fig. 600/601

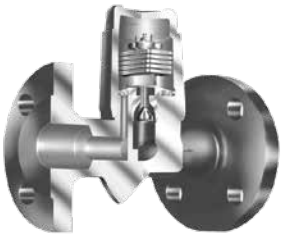

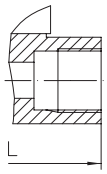

Fig. 600/601...2
threaded ends

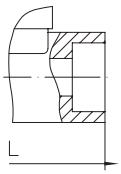

Fig. 600/601...3
sockets welded ends

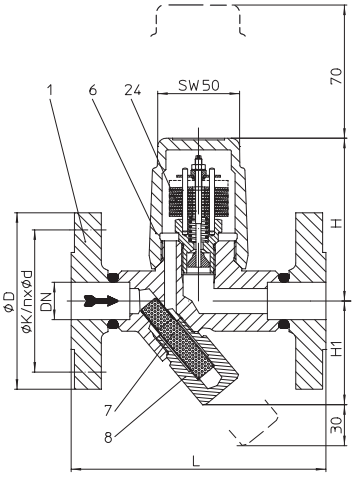

Fig. 600/601...1 with flanges

Features

- For the discharge of condensate sub-cooled up to 30K / 54 °F
- Automatic ventilation during start up and operation of the plant
- Robust and insensitive to water hammer
- Integrated non return protection
- Design with inside strainer (600) and with outside strainer (601Y)
- Optimized design for quick installation (ANSI150/300, size 1/2"-1")
- Gasketless sealing of the screw cap (ANSI150/300, size 1/2"-1")
- Installation in any position (except cover/screw cap downwards)
- Subcooling of condensate in continously adjustable (observe the operation instructions)
- The exchange of the controller is possible without disturbing the pipe connections

Types of Connection

Flanges...1	ANSI150 / 300 RF, DIN PN40
Thread ends...2	R- and NPT- thread
Socket weld ends...3	
Butt weld ends...4	

Material

Part	Description	DIN	ASTM/AISI
1	Body	1.0460	SA 105
2	Strainer*	1.4016	AISI 430
6	Screw cap	1.0460	SA 105
7	Strainer screen*	1.4016	AISI 430
8	Strainer plug*	1.4104+QT	AISI 430F
24	Controller*	Corrosion resist. bimetal TB102/85	
42	Sealing ring for plug*	R-Cu99	
43	Plug*	1.1181	1035, 1038[1)]
46	Blow down valve cpl.	1.4541	SA182F321

Dimensions Flange DIN PN40

Type of connection		Flanges			Screwed sockets Socket weld ends		
Nominal diameters	**mm**	**15**	**20**	**25**	**15**	**20**	**25**
Dimensions	**L**	150	150	160	95	95	95
	H	98	98	98	98	98	103
	H1	62	62	62	62	62	55
Weight approx. (kg)		3.2	3.7	4.2	1.7	1.6	2.1

Dimensions Flange ANSI 150/300

Type of connection		Flanges				
Nominal diameters	**mm**	**1/2"**	**3/4"**	**1"**	**1 1/2"**	**2"**
Dimensions	**L**	5.91	5.91	6.30	9.06	9.06
	H	3.86	3.86	3.86	5.67	5.67
	H1	2.44	2.44	2.44	2.68	2.68
Weight approx. (lb)		7.1	8.2	9.3	24.9	26.7

Fig. 45.600/601 PN40 - C22.8	**Operating Limits**		
Operating Pressure PS (bar-g)	32	22	14.5
Operating Temperature TS (°C)	250	385	450
Allowable diff.press. DPMX(bar)	32	22	13
for controller	R32	R22	R13

ANSI150 Fig. 42.600/601 ANSI300 Fig. 45.600/601		**Operating Limits**		
Max. temperature (°F) ANSI150		n.a.	n.a.	437
Max. temperature (°F) ANSI300		771	800	800
Controller unit	Sizes	R32	R22	R13
permissible△P (psi)	1/2" to 2"	464	319	189

Graph of Pressure & Temperature Ratings

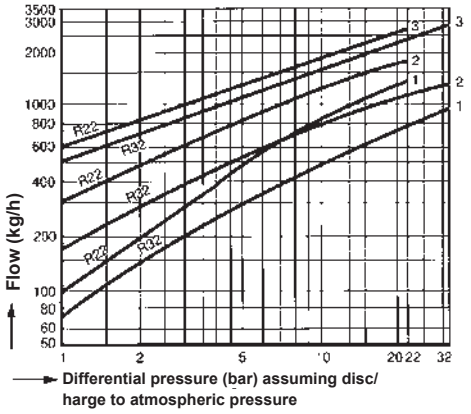

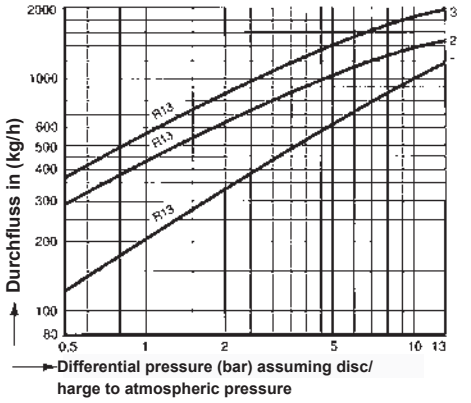

The condensate-temperature determines the aperture of the controller.
The capacity is increasing with the sub - cooling temperature of the condensate.

Capacity Chart

The capacity chart shows for controller R13, R22 and R32 The maximum flow at factory setting

Curve 1

Maximum flow quantity of hot condensate at approx. 10K / 18 °F below boiling temp.

Curve 2

Maximum flow sub-cooled condensate at approx. 30K / 54 °F below boiling temp.(through back up of condensate)

Curve 3

Maximum flow quantity of cold condensate at about 20 °C / 68 °F (during start-up of a cold installation)

*last updated 10/16